Production of Mercury-197 and Development of the LAURA Program

Daniel Mundy and Saed Mirzadeh

Isotope Development Group

Nuclear Science and Technology Division

Oak Ridge National Laboratory

July 23, 2004

Outline

- Introduction
- Why mercury-197?
- Mercury-197 Production Process
- Introduction to LAURA
- LAURA Development
- Current Progress and Future Work

Introduction

- Auger electron-emitting radioisotopes have long been considered for internal radiotherapy
- Auger electrons deposit large amounts of energy over a short range, allowing for selective cell destruction
- Platinum-195m has the highest Auger yield among radioisotopes suitable for medical applications

Why Mercury-197?

- ^{195m}Pt is produced with a very low specific activity
- ^{195m}Hg may be the best substitute for ^{195m}Pt
  - Comparable Auger electron yield
  - Produced carrier-free by proton bombardment of a gold target
  - High specific activity
- $^{197m\&g}$Hg is proposed as a first step in the development of the use of ^{195m}Hg
  - Identical chemical properties
  - High Auger electron yield
  - Reactor produced with relatively high specific activity

Mercury-197 Production Process

- Target development
  - Quartz ampoule
  - Al foil
  - Polyethylene container
  - Graphite rabbit
- Target is irradiated using the pneumatic tube in the NAA facility
- Hg target mass: ~1 mg
- Irradiation time: ~10 sec
- Expected activity:
  - Natural Hg metal ~5 μCi
  - Enriched HgO ~350 μCi

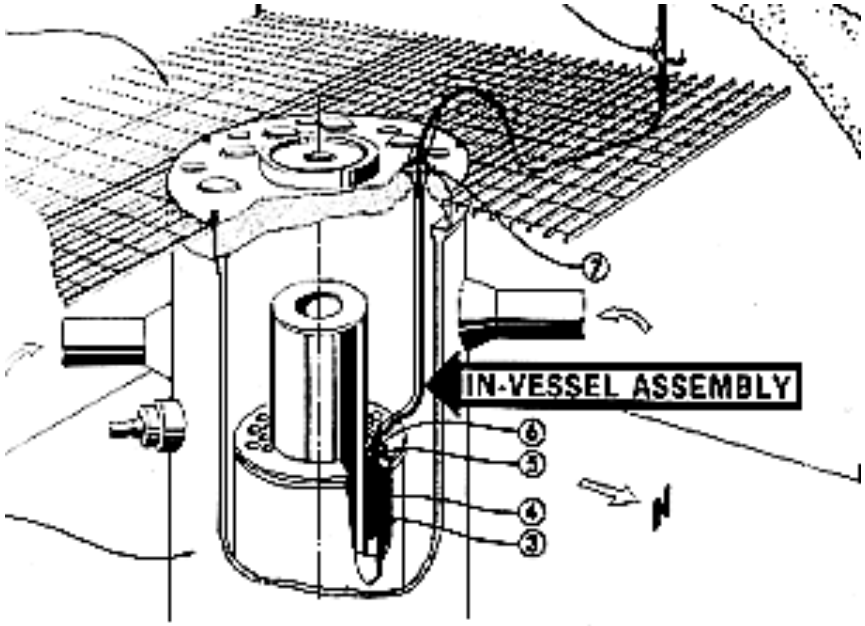

Let Me Introduce You to LAURA

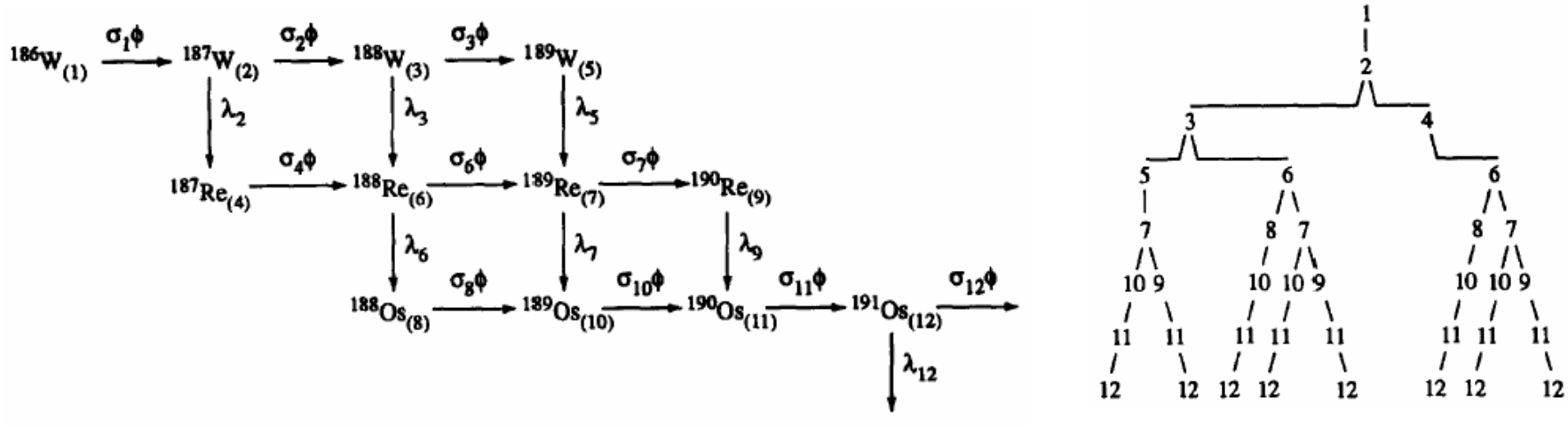

- FORTRAN program developed to predict production rates of any member of a nuclei network undergoing spontaneous decay and/or induced neutron transformation
- Utilizes user-generated text files for input
  - Target isotopes
  - Isotope properties
  - Reactor schedule and properties
- Isolates independent linear chains to calculate production rates

LAURA Development

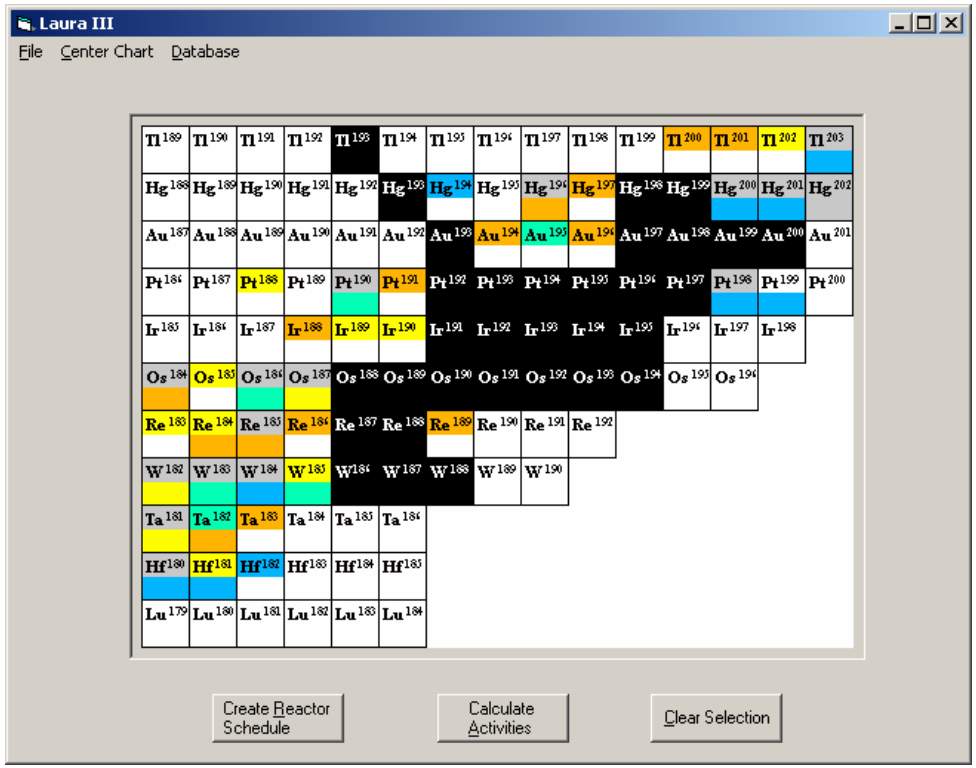

- Recent efforts directed at the development of a Visual Basic GUI
  - Calls a FORTRAN executable
  - Utilizes intermediate data files
- Current goal is to increase functionality and versatility
  - Implement FORTRAN code as a DLL
  - Store and transfer all necessary data internally
  - Update database to include all isotopes
  - Minimize redundant coding

Current Progress and Future Work

- Mercury Project
  - Target design complete and production under way
  - Experiment proposal completed and submitted for approval (CSD and RRD)
  - Pending approval, irradiation will be completed next week
  - Gamma-ray spectroscopy will be utilized to verify:
    - Cross sections
    - Activity produced
- LAURA Project
  - Have become familiar with both the VB and FORTRAN aspects of the code
  - In process of eliminating the need for intermediate external data files
  - Once the program is self-contained, the FORTRAN code will be modified to function as a DLL
  - Recommendations for future development

Reference

Mirzadeh, S. and Walsh, P. (1998). Numerical Evaluation of the Production of Radionuclides in a Nuclear Reactor (Parts I and II). *Radiation Research*, *151*, 1-18

Production of Mercury-197 and Development of the LAURA Program

Daniel Mundy and Saed Mirzadeh

Isotope Development

Nuclear Science and Technology Division

Oak Ridge National Laboratory

July 23, 2004